FARNELL INSTRUMENTS LTD.

STABILISED VOLTAGE SUPPLY

TYPE MPU

FARNELL INSTRUMENTS LTD.

SANDBECK WAY, WETHERBY, YORKS. Tel. Wetherby 2691/2/3/4

CONTENTS

INTRODUCTION

The MPU stabilised voltage supply unit provides a regulated d.c. voltage supply which is variable from 0 to 6 volts, with a maximum current capability of 0·5A.

The output voltage is adjusted by means of coarse and fine controls which are accessible for screwdriver adjustment through holes in the cover.

Overload protection is provided in the form of current limiting circuitry which limits the amount of current which may be drawn from the unit, thus protecting both the MPU and the apparatus being supplied, in case of overload. The output voltage resets automatically to its stabilised value when the overload is removed. In addition to the electronic current limiting circuitry, the supply is also intrinsically safe, as the output current is limited to a safe value by the output resistance of the transformer. A fuse is therefore not required in the d.c. supply. The mains input is fused internally as a protection against transformer failure. The current level at which the electronic current limiting circuit operates is adjustable by a pre-set control which is accessible for screwdriver adjustment through a hole in the cover.

The MPU will operate from 220 or 240 volt 50/60 c/s supplies, with a variation of ± 10% allowable on the nominal input voltage.

The MPU is small, compact and of sub-unit form suitable for incorporation into other equipment. It may be mounted in any plane, provided that free air circulation is allowed.

OPERATING INSTRUCTIONS

MOUNTING

Four 6BA tapped holes in the base bars are available for fixing the unit. The depth of thread available into the bars is 6mm (0·25″). Screws used for fixing should not allow a thread depth greater than this. (See sketches on page 6).

CONNECTIONS

The mains supply should be connected to the flying lead as follows :—

Mains Line	Red
Mains Neutral ..	Black
Earth	Green

Before connection to the mains supply, the mains neutral (black) wire should be connected to either the 220V or 240V tag on the transformer, according to the supply voltage in use.

The D.C. output is taken from the screw terminals (red positive, black negative) at the opposite end of the unit from the mains input.

SETTING UP

The output voltage may be adjusted to any required voltage in the range 0—6 volts by means of the "COARSE" and "FINE" controls, and the current level at which limiting occurs is set by the "CURRENT LIMIT" control. These controls are accessible from the top of the unit for screwdriver adjustment.

SERIES OR PARALLEL CONNECTION

Units may be connected in series to provide higher voltage outputs. For higher current, the voltages of each should be set alike before connecting in parallel, then fine adjustments made to equalise the currents drawn.

CIRCUIT DESCRIPTION

The circuit arrangement uses a conventional series transistor stabiliser, with feedback from the output to a differential amplifier, which controls the series stabiliser transistor. A zener diode is used as reference voltage source. A current limiting transistor circuit is included to protect against overload conditions.

The output from the main secondary winding of the transformer MT1 is rectified by the bridge rectifier MR1 and smoothed by C1 to provide an unstabilised d.c. supply. The positive end of this supply is connected to the positive output terminal via R10, and the negative end to the negative output terminal via the series regulating transistor VT4.

A second unstabilised d.c. supply is obtained from a subsidiary winding on MT1, the rectifiers MR2, and C3, and is used to supply the control amplifier and reference circuitry. The output of this second supply is fed via R1 to the zener diode Z2, which provides a 15 volt supply to power the control amplifier. R2 supplies current for the reference diode Z1 from the stable voltage across Z2. The negative end of the reference diode Z1 is connected to the positive output terminal.

Transistors VT1 and VT2 form a differential amplifier comparing the voltage across R6 and the lower part of P2 with the reference voltage across Z1. The potential divider P1, P2 and R6, connected between the negative output terminal and the positive end of Z1, provides feedback from the output to the differential amplifier VT1, VT2. Should the output voltage vary, the voltage at VT2 base will vary proportionately, giving a difference signal to the amplifier VT1, VT2. This signal is amplified by VT1 and VT2, and the amplified signal at VT2 collector is applied to the emitter follower transistor VT3, and thence to the series regulating transistor VT4 in such a sense as to alter the output voltage so that the original difference at VT1 and VT2 bases is reduced to zero.

The stabilised output voltage of the supply is controlled by the ratio of the potential divider P1, P2, R6, and is altered by adjustment of P1 and P2. The capacitor C2, which bypasses the upper part of the potential divider, increases the feedback from the output for higher frequency variations, thus ensuring a low output ripple voltage.

Overload protection is provided by the action of VT5 and its associated components. With no load current drawn from the output, transistor VT5 is non-conducting, as its base is at a positive voltage with respect to the emitter, due to the action of the potential divider R8, P3, R9. As the output current increases, the voltage across R10 increases proportionately, making VT5 emitter more positive until, at the limit point, VT5 emitter becomes more positive than the base, causing VT5 to conduct. VT5 thus bypasses drive current from VT3 base and prevents further current being drawn from the output. As the load resistance is reduced, the current which may be drawn from the output is limited to a safe value. The current level at which limiting occurs may be varied by adjusting the reverse bias voltage on VT5 base by means of the preset control P3.

SPECIFICATION

ELECTRICAL SPECIFICATION

Power requirements :	Single phase 50/60 c/s supplies of 220 or 240 volts, with ± 10% variation allowable on nominal supply voltage.
D.C. Output :	Voltage : 0—6V adjustable by coarse and fine controls.
	Current : 0—0·5A.
Load regulation (for no load to full load current change)	Less than 25mV.
Line regulation (for ± 10% mains variation at full load)	Less than 5mV.
Output ripple and noise (at full load)	Less than 2mV peak to peak.
Maximum operating temperature :	40°C.
Overload protection :	Input fuse and electronic current limiting.

MECHANICAL SPECIFICATION

Overall size :	150mm x 63mm x 65·5mm high tolerance ± ¾mm. (5·90″ x 2·48″ x 2·57″ high) tolerance ± ·030″.
Fixing Dimensions :	85mm. (3·346″) ± ¼mm. (± ·010″) 50mm. (1·969″) ± ¾mm. (± ·030″)

4—6BA screws are located at these fixing centres. Max. length of screw when bolted down to a 1/16″ thick base plate ¼″.

Weight : 0·567 kilos (1·25 lbs.).

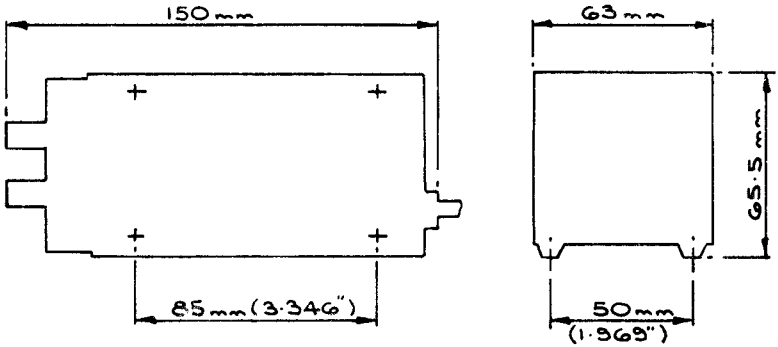

MPU.

ERRATA AND ADDENDA

ALTERNATIVE COMPONENTS TO THOSE LISTED ON CIRCUIT DIAGRAM MAY BE USED IN THE EVENT OF SUPPLY DIFFICULTIES. MAJOR CHANGES TO THE DESIGN OR MANUAL ARE LISTED BELOW.

DRAWING No.
B1155

THIRD ANGLE PROJECTION

USED ON
B1155

R	1, 2, 11, 3,5,4, 12, 6, 7, 10, 9, 8,	R
C	3, 1, 2, 5 4,	C
VT	1, 2, 3, 5, 4,	VT
MISC	F1 MT1 MR2, MR1, Z2, Z1, P1, P2., P3,	MISC

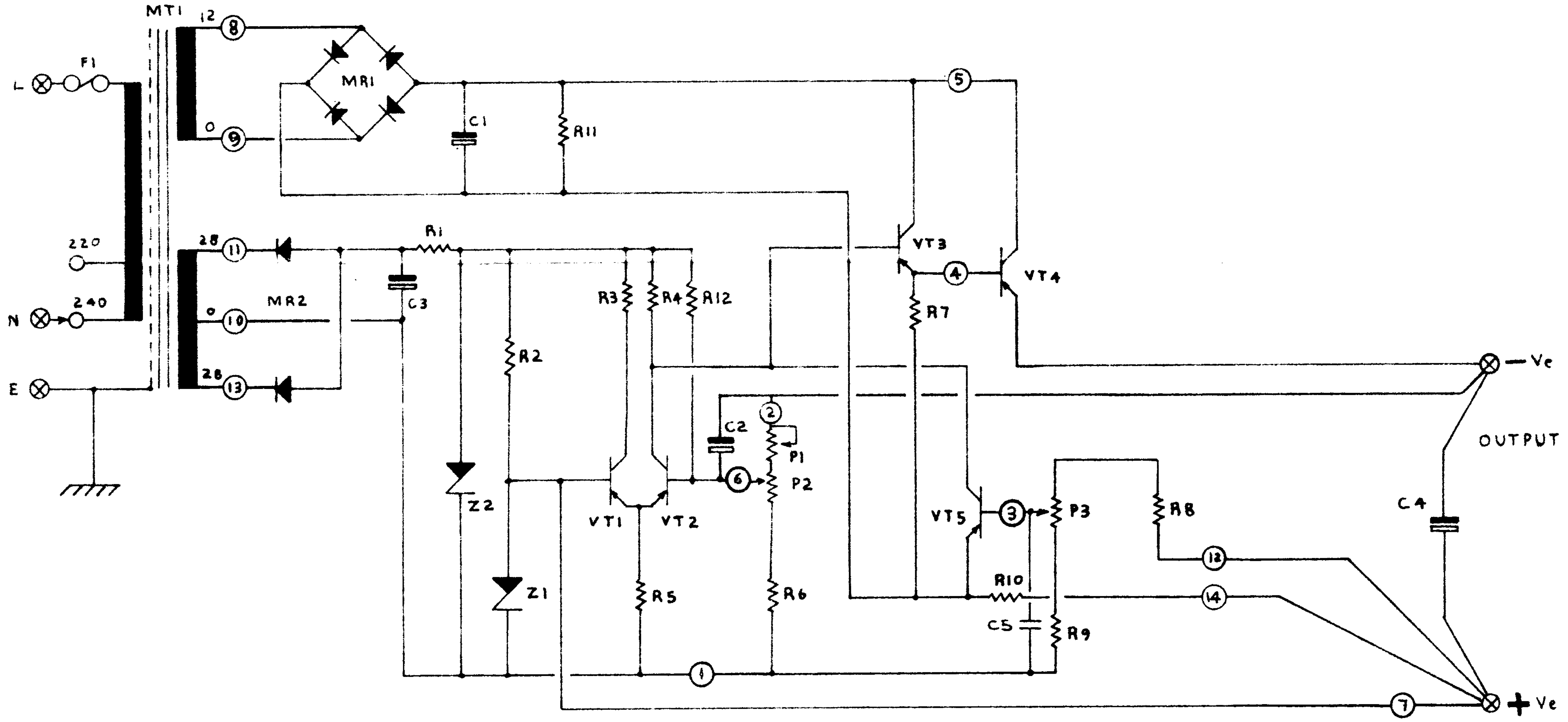

TRACED						
CHECKED						
DRAWN	ISSUE	DATE	MOD No			
A Hunter	1	28 4 69				

TOLERANCES

MATERIAL

PROTECTIVE FINISH

DIMENSIONS IN

FARNELL INSTRUMENTS LTD, WETHERBY, YORKS.

TITLE :–
CIRCUIT DIAGRAM
0–6V MPU, S89.

DRAWING No.
B1155

SHEET 1 OF 1 SHEETS